A Day in the life…a Strange one in our workshop.

There's a quote I read somewhere that could well have been written with people like me in mind: 'It's so simple to be wise. Just think of something stupid to say - and then don't say it'. Good advice, but particularly in this trade, it's easier said than done, if you get my meaning.

Take the other day for example. I was at my bench, quietly minding my own business and prodding hopefully at the remote control of a Panasonic DMR-E50 DVD recorder when the voice of reason flashed over. "Do you actually know what you're up to?" she enquired tartly. Dear Heart drummed her fingers on the machine. "What's wrong with it then?" Affronted, I puffed myself up and explained grandly that it ignored remote commands, sometimes wouldn't record, and that 'recover' or 'U99' would occasionally appear on the display, followed by shut down. Then I blustered an impressive something or other about software, error codes and the like. By the time I ran out of words, I knew I'd dug myself a deep hole. "You do realise how easy it is to accidentally change the remote command mode on this model" she remarked, picking up the remote. "All you do is hold down enter and prod one, two, three or whichever to alter it. Chances are that the customer's done just that while he's been flapping about in the menu trying to sort the other problems. Then he couldn't get back in again." I tried to think of a clever response, but nothing happened. Somewhere in the evolutionary chain, mother nature had programmed her female logic, conferring a knack when it came to software and button pushing. A guy could find it irritating. Moments later she'd matched the remote and the machine's command mode and flounced back to her own job, leaving me with the remaining symptoms which suddenly seemed much more like power supply trouble now the remote issue had been despatched. Sure enough, I discovered that C112 (470uF 16V) and C127 (47uF 35V) in the PSU secondaries read high ESR. I replaced them, cleaned the pickup lens and the owner's ropey old discs. Everything worked perfectly and I surreptitiously began parcelling the job up. "And you really ought to set it back to command mode one", came a voice behind me long before the one in my head had a chance.

Presently, I became aware of a series of mid level groaning sounds emanating from the vicinity of the audio bench, and grabbed my chance to redress the balance. Frequency-wise I reckoned they were around a kilohertz and certainly rich in very odd harmonics. Investigation revealed the source to be human, not electronic. "Do you actually know what you're up to?" I ventured giving her a playful prod. She squirmed away irritably. "Get off me. I've just spent the last hour replacing the pick up in this Teac, but it's still not right. Listen". Sure enough, as the CD played, it was momentarily interrupted, then a second or two later, resumed from precisely where it had left off. "I thought it was mistracking, but it's not as such" she observed. "It just seems to pause, then continue again, and the longer it's on the worse it gets". The machine in question was a CR-

H250, a neat, shoebox sized CD receiver with a brushed aluminium fascia. So compact that repairs to it looked rather time consuming.

The disc mechanism is positioned beneath two PCB's, all linked with short flexi cables. Well, it would be wouldn't it? We found it was just about possible, by rearranging the positions of the front panel and upper PCB, to get a closer look at- and listen to - what was going on at the moment the malfunction occurred. When the symptom showed, the disc slowed fractionally and there was a click as the focus servo forcibly offset the lens. The CD section employs a Toshiba TA2125AF surface mounted driver chip, reference IC13 which delivers the necessary current drives for focus, tracking, disc motor and drawer motor. I spotted it sandwiched down between the two PCB's, with a gap just wide enough for me to push a finger tip to it.
"I guess there's an internal thermal shut-off incorporated in that damned chip" I spluttered a split second later, sucking my scorched digit. "Did I just witness one of those well-honed measurement techniques you were droning on about the other day?" smirked my companion, falling about. "Years of experience and all that jazz?" Ignoring her I found slight comfort in the fact that freezing the chip made the symptom disappear. "How's about I sort out a cuppa for us while you remove the mechanism and check the motor resistances" I called out over my shoulder, en route to the cold tap. Sure enough, the culprit turned out to be the disc motor. Its terminal resistance had fallen from 10 ohms to just over 4, because of an internal build up of carbon brush material peppering the armature. The resultant increase in IC13's dissipation triggered its on board thermal protection, briefly inhibiting drive until its temperature fell sufficiently to allow the cycle to repeat. In this instance the repair was urgent, so we fitted a new motor from stock; however Teac can supply the complete traverse mechanism if required, via Charles Hyde.

The door opened and in slid Mr Strange. He leered toothily at Dear Heart who recoiled slightly then set his lips in a line. "What can 'ee do 'im for?" he grated, thrusting a Matsui LM20N2 LCD set at her. "I know Argos got 'em going cheap down town see, but I thought I'd give thee a chance". "Gosh, you're really in luck" I began smoothly, "because today just happens to be our estimate day". My colleague shot me a look. "Of course, you'll realise we must make a charge for the time we spend doing it", I added in a smiley voice. He turned away. "Can't be more than a wire off" he asserted. "Nothing in 'em now is it?" Once he'd beetled off, I powered up the set, noting there was no backlight operation. Even so, checks indicated that the inverter was running. (A quick test involving clipping the scope probe ground clip and tip together to form a loop with the ground lead, then placing it close to one of the inverter transformers). I then shone a pen light through one of the small holes of the LCD's rear metal cover, and could make out an image on the screen. So the problem was due to none of the backlights operating, despite the fact that the inverter was running, which on the face of it seemed to be a contradiction. I wasn't really convinced that the inverter panel was faulty, and when I learned from our supplier that I was expected to order an absurd pack of ten boards in order to prove it one way or another, I determined to trace the problem to component level. I began by scratching my head, but as that didn't seem to help much, I searched out a heap of assorted scribbles, which I'd hastily made during past LCD training sessions, and tried to make sense of them.

Now I'm one of those folk who like plenty of information as to how things work, especially the basics. It could be down to the fact that the exceptional training, which was the norm when I entered this trade as a lad some forty years ago, has spoilt me for today's so-called information age. Hence, if I don't get the drift on a particular subject from first principles, I find I just can't get going at all. Maybe I hadn't paid enough attention at the time I wrote my notes, but each of my scrawls seemed rather short on real practical information, providing little reassurance. So I settled down to compile something a bit more descriptive. Eventually, I'd combined some selected basics and a simplified example of practical circuit operation. Although my notes referred to one of several variations on LCD backlights and inverter circuits, they seemed to correspond quite closely to the set in question:

A backlight comprises an array of cold cathode fluorescent lamps (CCFL's), containing Neon and Argon gas mixed with Mercury, which generally require a sinusoidal ac power source to drive them, provided by a dc to ac inverter. This source is controlled in order to:

a) *Establish the required operating drive conditions for each backlight in the group, so as to equalise performance and optomise lifespan of the assembly; typically 1750V p-p to 3500V p-p is required here.*

b) *Produce the initial high voltage required to ionise the gas contained in the CCFL's (approximately 1.2 to 1.8 times the above operating value), for a few hundred microseconds or so. The greater the tube length, and the narrower its diameter, the greater the required strike voltage will need to be. This value is also dependent on the ambient temperature of the tube, rising by up to 40% at temperatures of less than 25 degrees centigrade.*

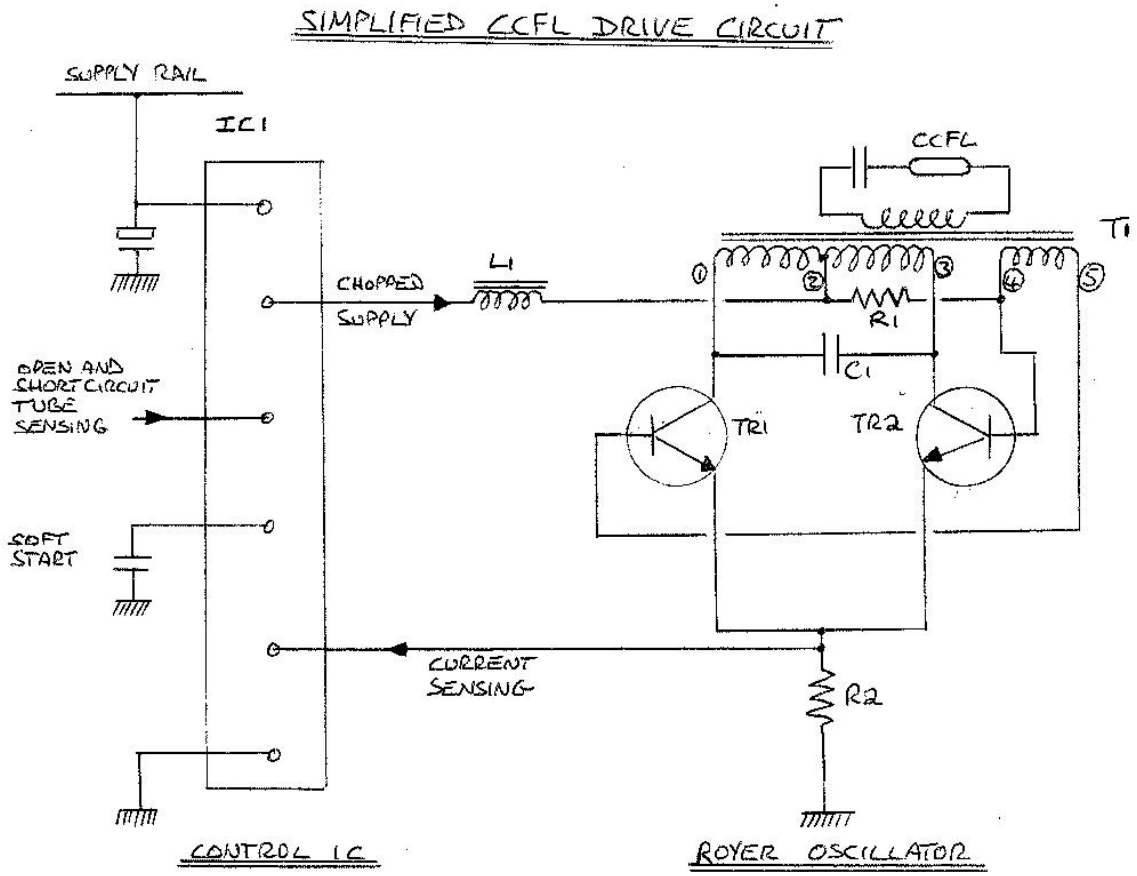

The inverter panel of a typical basic LCD receiver, similar to the one in question, comprises a self-oscillating sinewave generator and control section, an example of which is shown in figure 1. The circuit formed by T1, TR1, TR2, C1 and R1 is known as a Royer oscillator, whose resonant frequency is set by C1, T1 and the impedance seen by T1 secondary; 50Khz is a typical value, but anything in the range of 20Khz to 70Khz may be encountered, depending on the individual design.
Positive feedback is provided by the tertiary winding at pins 4 and 5. The role of IC1 is to control the amplitude of oscillating current flow in T1 primary, sensed by monitoring the voltage drop across R2, to bring about dependable striking and illumination. For a given oscillator frequency, this voltage will represent the power delivered to the CCFL. In our example, IC1 provides pulse width modulation of the oscillator's on-time duty cycle as the means of control, by chopping the supply fed via L1 to pin 2 of T1 at a suitable rate (faster than the eye can detect, typically 270Hz or 330Hz to avoid frame interaction).

Armed with this information I attempted to check the amplitude of the backlight drive waveforms, but quickly realised that my 'scope probe was having a significant impact on circuit action. Then I tried connecting high voltage 2pF capacitors in series with the tip and ground connections. Assuming a 15pF probe capacitance, I concluded that there was plenty of oscillation here. Surely every CCFL couldn't have failed? Finally, after re-reading my notes, light dawned. "For a given oscillator frequency the drive amplitude determines the power delivered to the CCFL". Maybe the problem was one of frequency, not amplitude? Dispensing with direct 'scope connections, I used the trick of forming a loop next to one of the inverter transformers; this time I looked at the period of the waveform and measured 1.7uS, ie almost 590 kHz! Panther-like I homed in on the component corresponding to C1, finding that it comprised a parallel pair of blue 270nF 250V capacitors blobbed together with silicone. As I removed them to check values, I realised this was a long shot because, even if one of them was open circuit, it couldn't possibly account for a ten-fold increase in oscillator frequency. They would both have to be faulty. To my delight one read 6nF and the other only 1nF!

Of course, there was no sourcing the original component types, so I finally inserted a 220nF and 330nF parallel pair of 250V capacitors (RS codes 190 7817 and 190 7823), curing the fault. These capacitors need to have a low dissipation factor (DF) to prevent self-heating. As two components of the same type had failed, I hoped this would become a common fault on a high volume production set…just what we need! On a high from my triumph against the odds, I happened to spot Strange slithering past the window and ushered him in with a cry of triumph.

He quickly cut to the chase. "So what'll it cost us then? Only down the boot sale my missus seen one just like 'im, only cheap, guaranteed like". I turned away irritated - the voice in my head told me he was far more streetwise than I'd ever be, so I might as well call his bluff. "And here's the paperwork, Mr Strange" I announced with a flourish, "now you can either scrap the set and settle for our time as I explained, or take it home it repaired and working perfectly for less than the cost of any half decent replacement. Either way, the charge is the

same, so it's your decision". Reluctantly he reached in to his back pocket and pulled out a fat wad of folded notes. "Every time I comes here it costs me money" he groaned. "Any discount for regulars"? I thought of the money I'd just saved him and the time and effort I'd put in on his repair, and opened my mouth to protest. Then over his shoulder I caught a glimpse of Dear Heart, looking as exasperated as I felt. "Don't" she mouthed. "Get off your soap box" added the voice in my head. Just for once, I decided the wisest thing would be to heed them both. So, remaining silent I stood back and watched as Strange laboriously counted out the notes, a look of agonised resignation etched on his face…